DO NOT SCALE IF IN DOUBT ASK

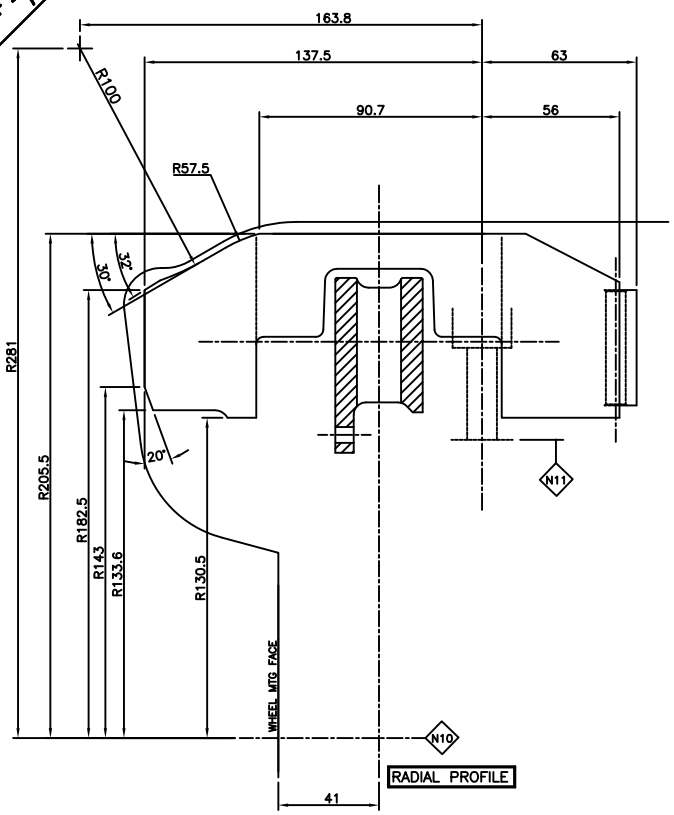

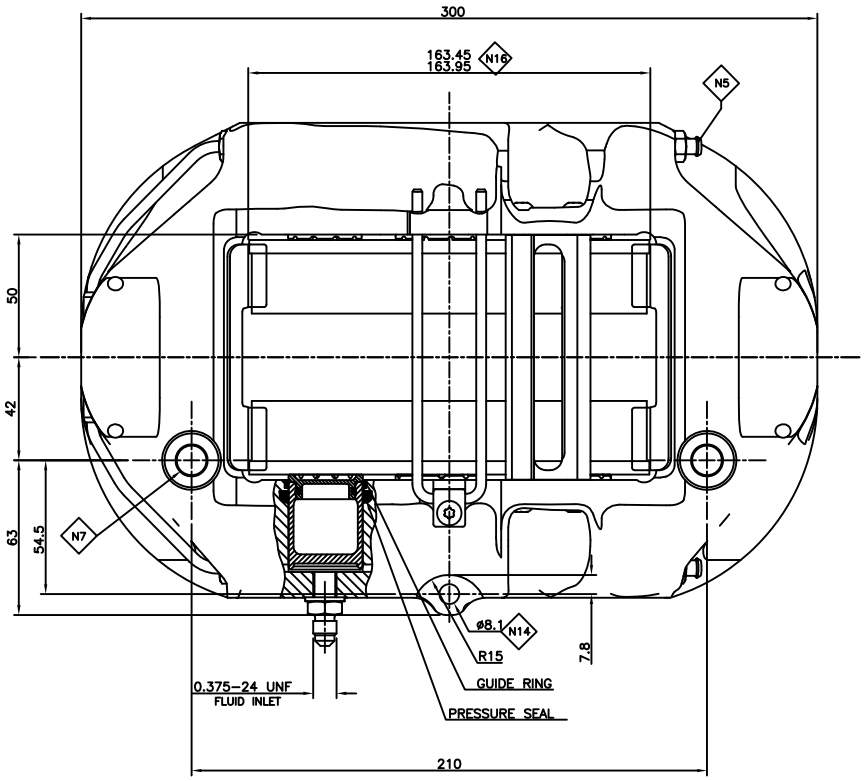

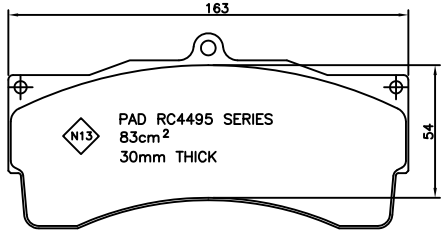

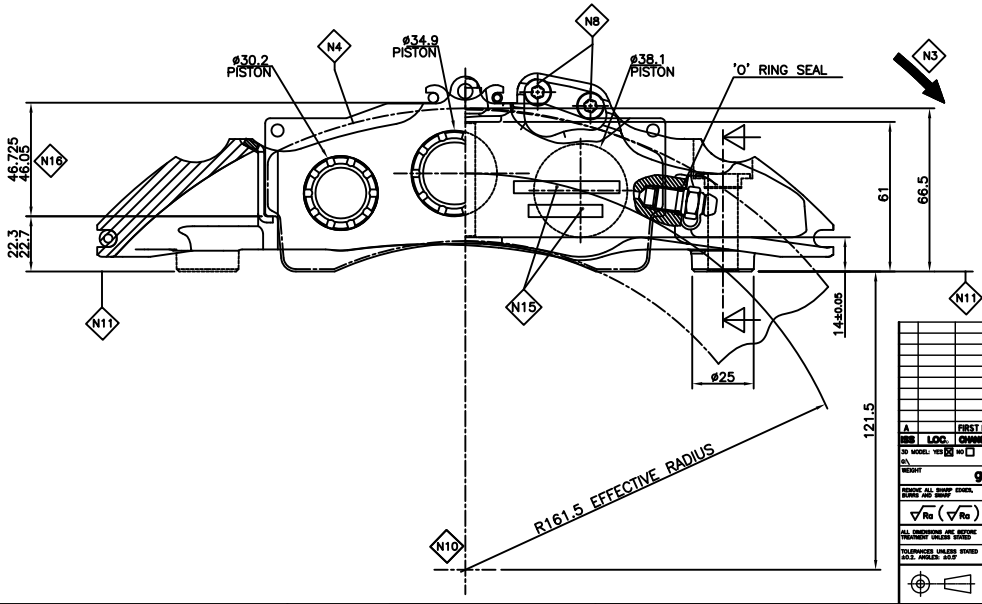

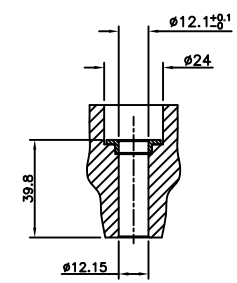

NOTES:

N1: LEFT HAND TRAILING CALIPER AS DRAWN
RIGHT HAND TRAILING CALIPER SYMMETRICALLY OPPOSITE
N2: MANUFACTURING SPECIFICATION: RC2013
N3: DISC ROTATION: DISC MUST PASS SMALL PISTON DIAMETER FIRST.
N4: PAD MATERIAL OUTLINE
N5: BLEED SCREW TORQUE 14Nm HOT
18Nm COLD
N6: INSTALL CALIPER WITH PAD 0.5 ABOVE DISC
N7: BRACKET TO CALIPER RECOMMENDED TORQUE

	GRADE 12.9 BOLT		KAYLOCK NUT	
SIZE	Nm	lb.ft	Nm	lb.ft
M12	105	76	48	35

N8: M6x1.0 BRIDGE BOLT TORQUE 7–8Nm (5–6lb.ft)
N9: ALL DIMENSIONS ARE NOMINAL UNLESS STATED
N10: DISC AXIS
N11: CALIPER MOUNTING FACE
N12: ALL FLUID PORTS 0.375"–24 UNF
N13: CALIPERS SUPPLIED LESS PADS. PROFILE OF PAD AS SHOWN
N14: 3rd MOUNTING TIGHTENING TORQURE – M8 30Nm (22lb.ft)
N15: LASER MARK ALCON PART NUMBER, M2M ISSUE LEVEL AND BATCH IDENTIFICATION CODE
N16: MIN & MAX DIMENSIONS FOR PAD FITMENT

CAR9529ZG51NSRT	00B	RIGHT	ø375x35.6	STAINLESS PISTONS WITH GUIDE RINGS AND VENTED INSERTS
CAR9529ZG51NSLT	00B	LEFT		
CALIPER PART No	REVISION LEVEL	HAND	DISC SIZE	REMARKS

ISS	LOC.	CHANGE	DRN DATE	CHK DATE	MCHK DATE	APP DATE
A		FIRST ISSUE	26.09.07	12.11.07		

3D MODEL: YES ☒ NO ☐
WEIGHT g
REMOVE ALL SHARP EDGES, BURRS AND SWARF
Ra (Ra)
ALL DIMENSIONS ARE BEFORE TREATMENT UNLESS STATED
TOLERANCES UNLESS STATED ±0.2. ANGLES: ±0.5°

SCALE 1:1
MATERIAL
HEAT TREATM./CURE CYCLE
SURFACE TREATMENT

DRAWN BY PJS
DATE 26.09.07
CHECKED BY GW
DATE 12.11.07
MATERIAL CHECKED BY
DATE
APPROVED BY
DATE

ALCON COMPONENTS LIMITED
APOLLO
TAMWORTH
STAFFORDSHIRE B79 7TN
TEL: +44(0)1827 723700
alcon

NOTE:
THIS DRAWING AND INFORMATION THERE UPON IS THE PROPERTY OF ALCON COMPONENTS LIMITED. IT IS LENT ON THE CONDITION THAT IT, IN WHOLE OR IN PART, SHALL NOT BE REPRODUCED, COPIED,LENT OR DISCLOSED TO ANY PERSON WITHOUT WRITTEN CONSENT OF ALCON AND SHALL BE RETURNED TO ALCON COMPONENTS LIMITED.

PART NAME (Max. 40 digits)
4x2 CALIPER MONOBLOC INSTALLATION DRAWING

PART NUMBER CAR95i37
DRAWING ISSUE
MANUF CODE
SHEET 1 FROM 2